Smart Card Reader Interface with Power Management

AT83C24

Features

- **Smart Card Interface**
  - **Compliance with ISO 7816, EMV2000, GIE-CB, GSM and WHQL Standards**
    - **Card Clock Stop High or Low for Card Power-down Modes**
    - **Support Synchronous Cards with C4 and C8 Contacts**
    - **Card Detection and Automatic de-activation Sequence**
    - **Programmable Activation Sequence**
  - **Direct Connection to the Smart Card**
    - **Logic Level Shifters**
    - **Short Circuit Current Limitation**
    - **8kV+ ESD Protection (MIL/STD 883 Class 3)**
  - **Programmable Voltage**
    - **5V ±5% at 65 mA (Class A)**
    - **3V ±0.2V at 65 mA (Class B)**
    - **1.8V ±0.14V at 40 mA**
  - **Low Ripple Noise: < 200 mV Max**
- **Versatile Host Interface**
  - **ICAM (Conditional Access) Compatible**
  - **Two Wire Interface (TWI) Link**
    - **Programmable Address Allow up to 8 Devices**
  - **Programmable Interrupt Output**
  - **Automatic Level Shifter (1.6V to V_{CC})**
- **Reset Output Includes**
  - **Power-On Reset (POR)**
  - **Power-Fail Detector (PFD)**
- **High-efficiency Step-up Converter: 80 to 98% Efficiency**
- **Extended Voltage Operation: 2.85 to 5.5V**
- **Low Power Consumption**
  - **1 mA Maximum Operating Current**
  - **150 mA Maximum In-rush Current**
  - **20 µA Typical Power-down Current (without Smart Card)**
- **4 to 48 MHz Clock Input (7 MHz Min for Step-up Converter)**
- **Industrial Temperature Range: -40 to +85°C**
- **Packages: SO28 and QFN28**

Description

The AT83C24 is a smart card reader interface IC for smart card reader/writer applications such as EFT/POS terminals and set top boxes. It enables the management of any type of smart card from any kind of host. Up to 8 AT83C24 can be connected in parallel using the programmable TWI address.

Its high efficiency DC/DC converter, low quiescent current in standby mode makes it particularly suited to low power and portable applications. The reduced bill of material allows reducing significantly the system cost. A sophisticated protection system guarantees timely and controlled shutdown upon error conditions.

4234C–SCR–04/04

Acronyms

TWI: Two-wire Interface

POR: Power On Reset

PFD: Power Fail Detect

ART: Automatic Reset Transition

ATR: Answer To Reset

Block Diagram

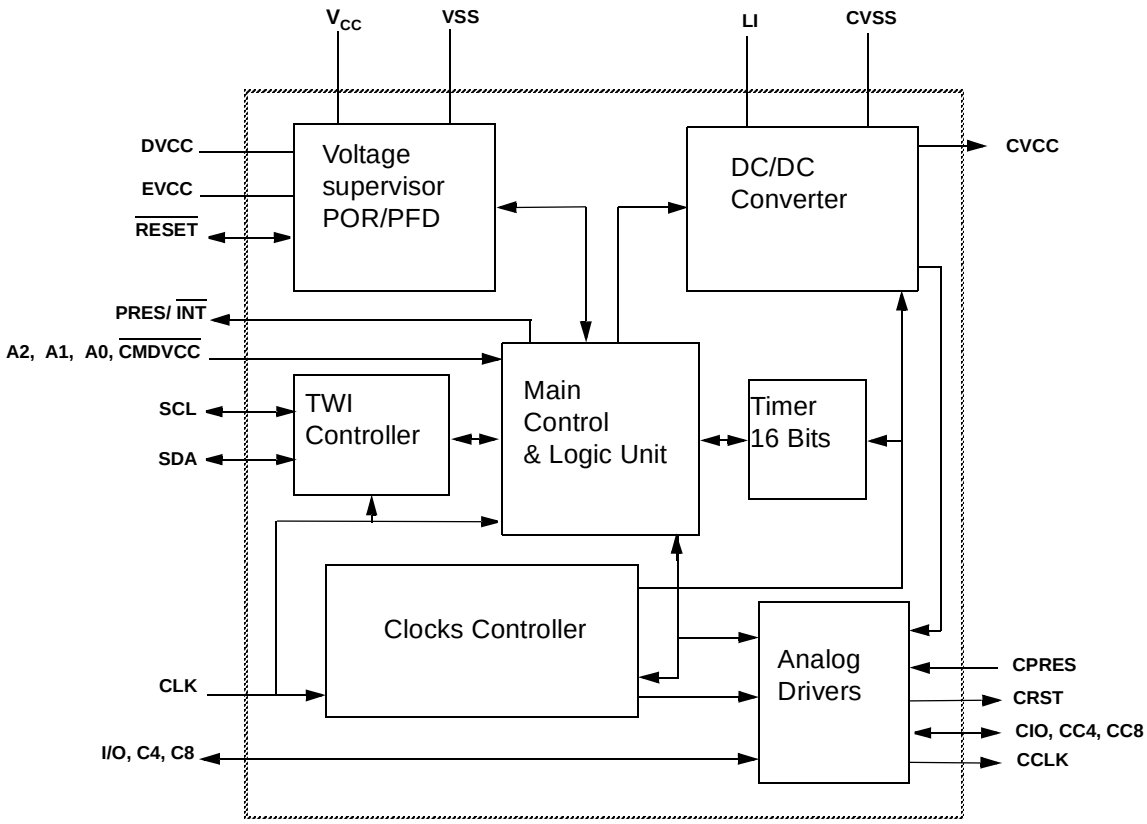

Pin Description

Pinout (Top View)

AT83C24 28-pin SOIC Pinout

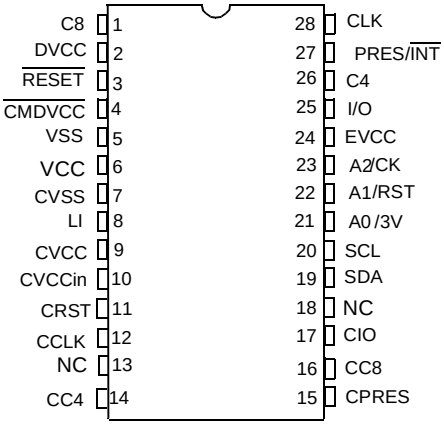

QFN28 pinout

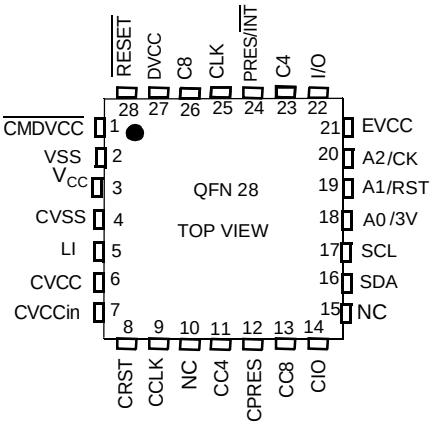

Note: NC = Not Connected

Signals

Table 1. Ports Description

Pad Name	Pad Internal Power Supply	ESD Limits	Pad Type	Description
A2/CK- A1/RST- A0/3V	EVCC	3 kV	I	Microcontroller Interface Function: TWI bus slave address selection input. A2 and A1 pins are respectively connected to CCLK and CRST signals in “transparent mode” (see Transparent mode § page 16). The slave address of the device is based on the value present on A2, A1, A0 on the rising edge of $\overline{\text{RESET}}$ pin (see Table 2).
PRES/$\overline{\text{INT}}$	EVCC	3 kV	O open-drain	Microcontroller Interface Function: Depending on IT_SEL value (see CONFIG4 register), PRES/$\overline{\text{INT}}$ outputs card presence status or interruptions (see Interrupts § page 9) An internal Pull-up to EVCC can be activated in the pad if necessary using INT_PULLUP bit (CONFIG4 register).
$\overline{\text{RESET}}$	V_{CC}	3 kV	I/O open-drain	Microcontroller Interface Function: • Power-on reset • A low level on this pin keeps the AT83C24 under reset even if applied on power-on. It also resets the AT83C24 if applied when the AT83C24 is running. • Asserting $\overline{\text{RESET}}$ when the chip is in Shut-down mode returns the chip to normal operation. • AT83C24 is driving the $\overline{\text{Reset}}$ pin Low on power-on-reset or if power fail on V_{CC} or DVCC (see POWERMON bit in CONFIG4 register), this can be used to reset or interrupt other devices. After reset, AT83C24 needs to be reconfigured before starting a new card session.
SDA	V_{CC}	3 kV	I/O open-drain	Microcontroller Interface Function TWI serial data
SCL	V_{CC}	3 kV	I/O open-drain	Microcontroller Interface Function TWI serial clock

Table 1. Ports Description (Continued)

Pad Name	Pad Internal Power Supply	ESD Limits	Pad Type	Description
I/O	EVCC	3 kV	I/O	Microcontroller Interface Function Copy of CIO pin and high level reference for EVCC. I/O is the reference level for EVCC after power up. If an external power supply is on EVCC pin, I/O should not be kept above EVCC for an extended time.
C4	EVCC	3 kV	I/O (pull-up)	Microcontroller Interface Function Copy of Card CC4.
C8	EVCC	3 kV	I/O (pull-up)	Microcontroller Interface Function Copy of Card CC8.
CLK	EVCC	3 kV	I	Microcontroller Interface Function Master Clock
CIO	CVCC	8 kV+	I/O (pull-up)	Smart card interface function Card I/O
CC4	CVCC	8 kV+	I/O (pull-up)	Smart card interface function Card C4
CC8	CVCC	8 kV+	I/O (pull-up)	Smart card interface function Card C8
CPRES	V_{CC}	8 kV+	I (pull-up)	Smart card interface function Card presence An internal Pull-up to VCC can be activated in the pad if necessary using PULLUP bit (CONFIG1 register).
CCLK	CVCC	8 kV+	O	Smart card interface function Card clock
CRST	CVCC	8 kV+	O	Smart card interface function Card reset
$\overline{\text{CMDVCC}}$	EVCC	3 kV+	I (pull-up)	Microcontroller Interface Function: Activation/Shutdown of the smart card Interface.
VCC		3 kV+	PWR	Supply Voltage V_{CC} is used to power the internal voltage regulators and I/O buffers.
LI		3 kV+	PWR	DC/DC Input LI **must be** tied to V_{CC} pin through an external coil (typically 4.7 µH) and provides the current for the charge pump of the DC/DC converter. It may be directly connected to V_{CC} if the step-up converter is not used (see STEPREG in CONFIG4 register and see minimum VCC value in Table 16 (class A) and table 17 (class B)).
CVCC		8 kV+	PWR	Card Supply Voltage CVCC is the programmable voltage output for the Card interface. It must be connected to an external decoupling capacitor.
CVCCin		8 kV+	PWR	Card Supply Voltage This pin must be connected to CVCC.

Table 1. Ports Description (Continued)

Pad Name	Pad Internal Power Supply	ESD Limits	Pad Type	Description
DVCC		3 kV+	PWR	Digital Supply Voltage Is internally generated and used to supply the digital core. This pin has to be connected to an external capacitor of 100 nF and should not be connected to other devices.
EVCC		3 kV+	PWR	Extra Supply Voltage (Microcontroller power supply) EVCC is used to supply the level shifters of host interface pins. EVCC voltage can be supplied from the external EVCC pin. It can also be generated internally by an automatic follow up of the logic high level on the I/O pin. In this configuration, connect a 100 nF + 100kOhms in parallel between EVCC pin and VSS pin.
CVSS		8 kV+	GND	DC/DC Ground CVSS is used to sink high shunt currents from the external coil.
VSS			GND	Ground

Operational Modes

TWI Bus Control

The Atmel Two-wire Interface (TWI) interconnects components on a unique two-wire bus, made up of one clock line and one data line with speeds of up to 400 Kbits per second, based on a byte-oriented transfer format.

The TWI-bus interface can be used:

- To configure the AT83C24
- To select the operating mode of the card: 1.8V, 3V or 5V
- To configure the automatic activation sequence
- To start or stop sessions (activation and de-activation sequences)
- To initiate a warm reset
- To control the clock to the card in active mode
- To control the clock to the card in stand-by mode (stop LOW, stop HIGH or running)
- To enter or leave the card stand-by or power-down modes
- To select the interface (connection to the host I/O/C4/C8)
- To request the status (card present or not, over-current and out of range supply voltage occurrence)
- To drive and monitor the card contacts by software
- To accurately measure the ATR delay when automatic activation is used

TWI Commands

Frame Structure

The structure of the TWI bus data frames is made of one or a series of write and read commands completed by STOP.

Write commands to the AT83C24 have the structure:

ADDRESS BYTE + COMMAND BYTE + DATA BYTE(S)

Read commands to the AT83C24 have the structure:

ADDRESS BYTE + DATA BYTE(S)

The ADDRESS BYTE is sampled on A2/CK, A1/RST, A0/3V after each reset (hard/soft/general call) but A2/CK, A1/RST, A0/3V can be used for transparent mode after the reset.

Figure 1. Data transfer on TWI bus

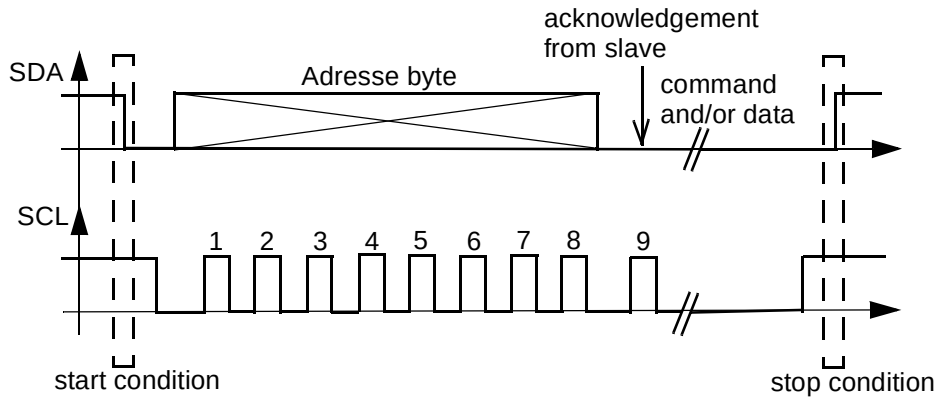

Address Byte

The first byte to send to the device is the address byte. The device controls if the hardware address (A2/CK, A1/RST, A0/3V pins on reset) corresponds to the address given in the address byte (A2, A1, A0 bits).

If the level is not stable on A2/CK pin (or A1/RST pin, or A0/3V pin) at reset, the user has to send the commands to the possible address taken by the device.

Figure 2. Address Byte

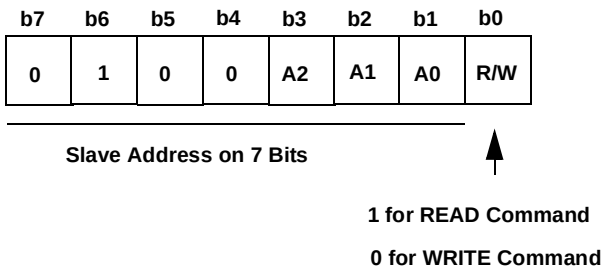

Up to 8 devices can be connected on the same TWI bus. Each device is configured with a different combination on A2/CK, A1/RST, A0/3V pins. The address byte of each device for read/write operations are listed below.

Table 2. Address Byte Values

A2 (A2/CK pin)	A1 (A1/RST pin)	A0 (A0/3V pin)	Address Byte for Read Command	Address Byte for Write Command
0	0	0	0x41	0x40
0	0	1	0x43	0x42
0	1	0	0x45	0x44
0	1	1	0x47	0x46
1	0	0	0x49	0x48
1	0	1	0x4B	0x4A
1	1	0	0x4D	0x4C
1	1	1	0x4F	0x4E

Write Commands

The write commands are:

1. Reset:

   Initialize all the logic and the TWI interface as after a power-up or power-fail reset. If the interface is activated, an emergency de-activation sequence is also performed. This is a one-byte command.

2. Write Config:

   Configure the device according to the last six bits in the CONFIG0 register and to the following four bytes in CONFIG1, CONFIG2, CONFIG3 then CONFIG4 registers. This is a five bytes command.

Figure 3. Command byte format for Write CONFIG0 command

b7	b6	b5	b4	b3	b2	b1	b0
1	0	X	X	X	X	X	X

CONFIG0 on 6 Bits

3. Write Timer:

   Program the 16-bit automatic reset transition timer with the following two bytes. This is a three bytes command.

4. Write Interface:

   Program the interface. This is a one-byte command. The MSB of the command byte is fixed at 0.

5. General Call Reset:

   A general call followed by the value 06h has the same effect as a Reset command.

Table 3. Write Commands Description

	Address Byte (See Table 2)	Command Byte	Data Byte 1	Data Byte 2	Data Byte 3	Data Byte 4
1. Reset	0100 XXX0	1111 1111				
2. Write config	0100 XXX0	(10 + CONFIG0 6 bits)	CONFIG1	CONFIG2	CONFIG3	CONFIG4
3. Write Timer	0100 XXX0	1111 1100	TIMER1	TIMER0		
4. Write Interface	0100 XXX0	(0+INTERFACE 7 bits)				
5. General Call Reset	0000 0000	0000 0110				

Read Command

After the slave address has been configured, the read command allows to read one or several bytes in the following order:

- STATUS, CONFIG0, CONFIG1, CONFIG2, CONFIG3, INTERFACE, TIMER1, TIMER0, CAPTURE1, CAPTURE0
- FFh is completing the transfer if the microcontroller attempts to read beyond the last byte.

Note: Flags are only reseted after the corresponding byte read has been acknowledged by the master.

Table 4. Read Command Description

Byte Description	Byte Value
Address byte	0100 XXX1
Data byte 1	STATUS
Data byte 2	CONFIG0
Data byte 3	CONFIG1
Data byte 4	CONFIG2
Data byte 5	CONFIG3
Data byte 6	CONFIG4
Data byte 7	INTERFACE
Data byte 8	TIMER 1 (MSB)
Data byte 9	TIMER 0 (LSB)
Data byte 10	CAPTURE 1 (MSB)
Data byte 11	CAPTURE 0 (LSB)
Data byte 12	0xFF

Interrupts

The PRES/$\overline{\text{INT}}$ behavior depends on IT_SEL bit value (see CONFIG4 register).

- If IT_SEL= 0, the PRES/$\overline{\text{INT}}$ output is High by default. PRES/$\overline{\text{INT}}$ is driven Low by at least one of the following event:
  - INSERT bit set in CONFIG0 register (card insertion/extraction or bit set by software)
  - VCARD_INT bit set in STATUS register (the DC/DC output voltage has settled)
  - over-current detection on CVCC
  - VCARDERR bit set in CONFIG0 register (out of range voltage on CVCC or bit set by software)
  - ATRERR bit set in CONFIG0 register (no ATR before the card clock counter overflows or bit set by software)
- If IT_SEL= 1 (for software compatibility with existing devices) the PRES/$\overline{\text{INT}}$ output is High to indicate a card is present and none of the following event has occured:
  - over-current detection on CVCC
  - VCARDERR bit set in CONFIG0 register (out of range voltage on CVCC or bit set by software)
  - ATRERR bit set in CONFIG0 register (no ATR before the card clock counter overflows or bit set by software)

Several AT83C24 devices can share the same interrupt and the microcontroller can identify the interrupt sources by polling the status of the AT83C24 devices using TWI commands.

Clock Controller

The clock controller outputs two clocks (as shown in Figure 4 and Figure 5):

1. a clock for the CCLK: Four different sources can be used: CLK pin, DCCLK signal, CARDCK bit or A2/CK pin (in transparent mode).

Figure 4. Clock Block Diagram with Software Activation (see activation sequence §)

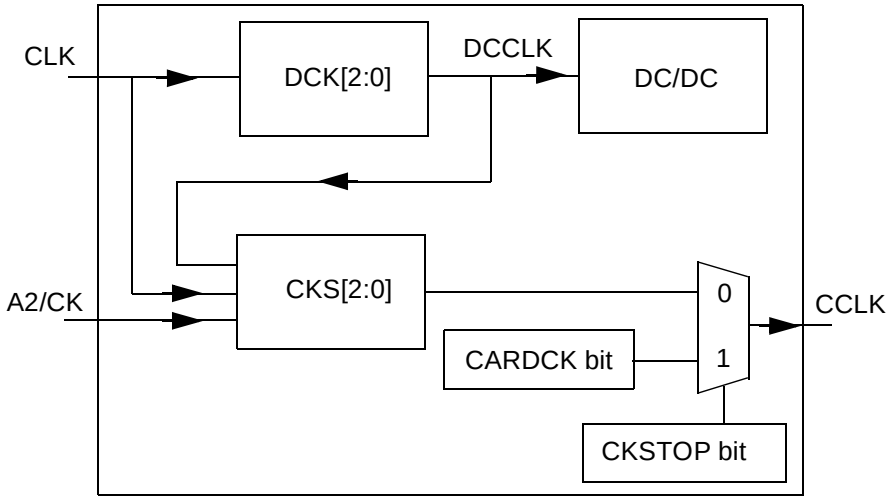

Figure 5. Clock Block Diagram with Hardware Activation (see activation sequence §)

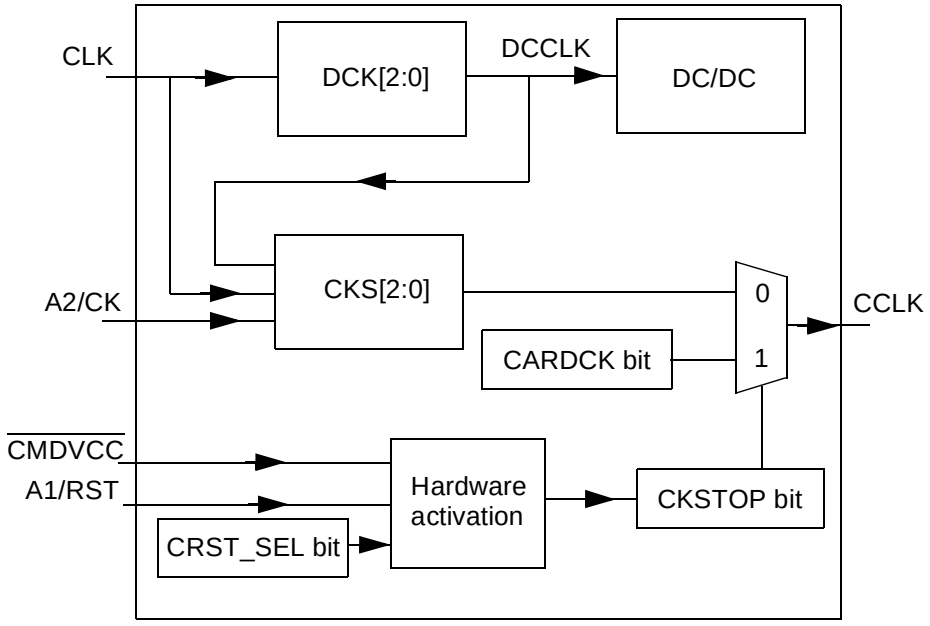

CRST Controller

The CRST output pin is driven by the A1/RST pin signal pin or by the CARDRST bit value. This selection depends of the CRST_SEL bit value (see CONFIG4 register).

If the CRST pin signal is driven by the CARDRST bit value, two modes are available:

- If the ART bit is reset, CRST pin is driven by CARDRST bit.

- If the ART bit is set, CRST pin is controlled and follows the “Automatic Reset Transition” (see Figure 12).

Figure 6. CRST Block Diagram with soft activation

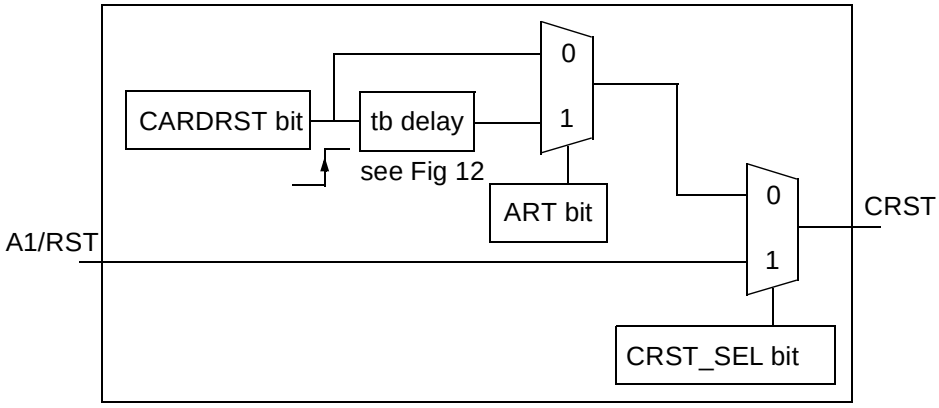

Figure 7. CRST Block Diagram with Hardware Activation ($\overline{\text{CMDVCC}}$ pin used)

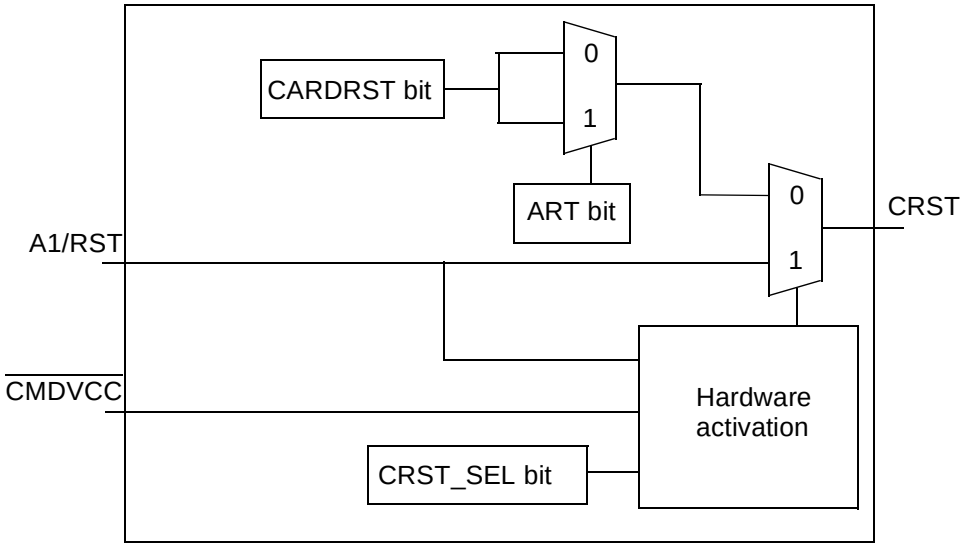

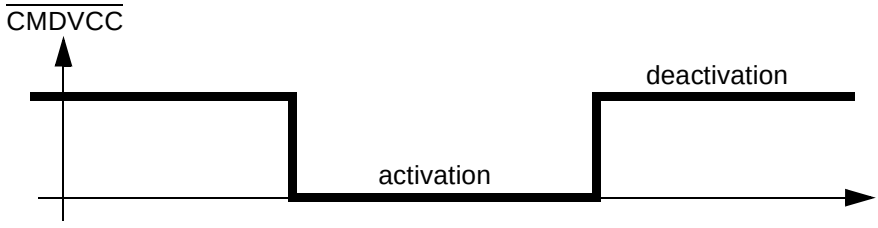

CIO, CC4, CC8 Controller

The CIO, CC4, CC8 output pins are driven respectively by CARDIO, CARDC4, CARDC8 bits values or by I/O, C4, C8 signal pins. This selection depends of the IODIS bit value. If IODIS is reset, data are bidirectional between respectively I/O, C4, C8 pins and CIO, CC4, CC8 pins.

Figure 8. CIO, CC4, CC8 Block Diagram

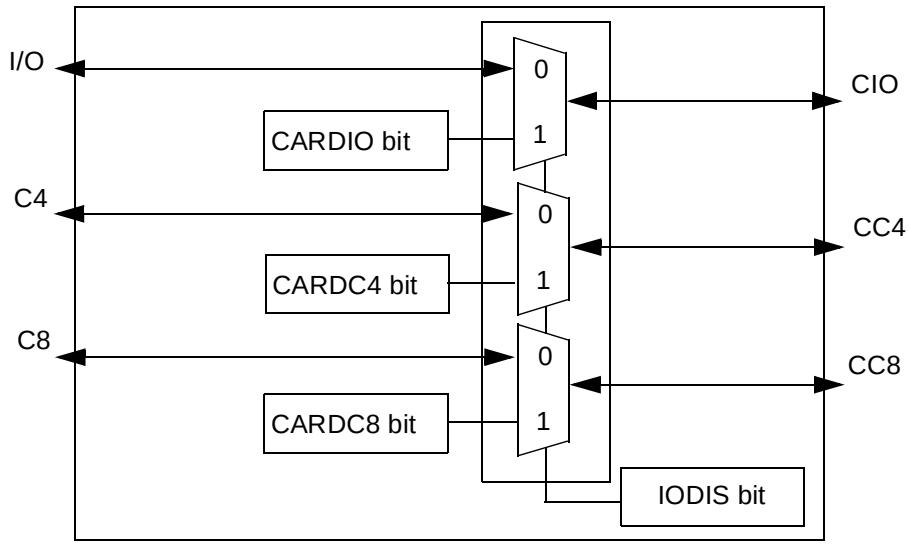

IO Transceiver

IO and CIO pins are linked together if IODIS bit=0 in INTERFACE register. This is done automatically during an hardware activation.

Their iddle level is 1.

The same behavior is applicable on C4/CC4 and C8/CC8 pins.

Card Presence Detection

The card presence is provided by the CPRES pin. The polarity of card presence contact is selected with the CARDDET bit (see CONFIG1 register). A programmable filtering is controlled with the CDS[2-0] bits (see CONFIG1 register).

An internal pull-up on the CPRES pin can be disconnected in order to reduce the consumption, an external pull-up must then be connected to V_{CC}. The PULLUP bit (see CONFIG1 register) controls this feature.

If the card presence contact is connected to V_{CC}, the internal pull-up must be disconnected and an external pull-down must be connected to the CPRES pin. The card presence switch is usually connected to gnd. The CARDDET bit polarity is then inverted.

An interrupt can be generated if a card is inserted or extracted (see interrupts).

Figure 9. Card Presence Input

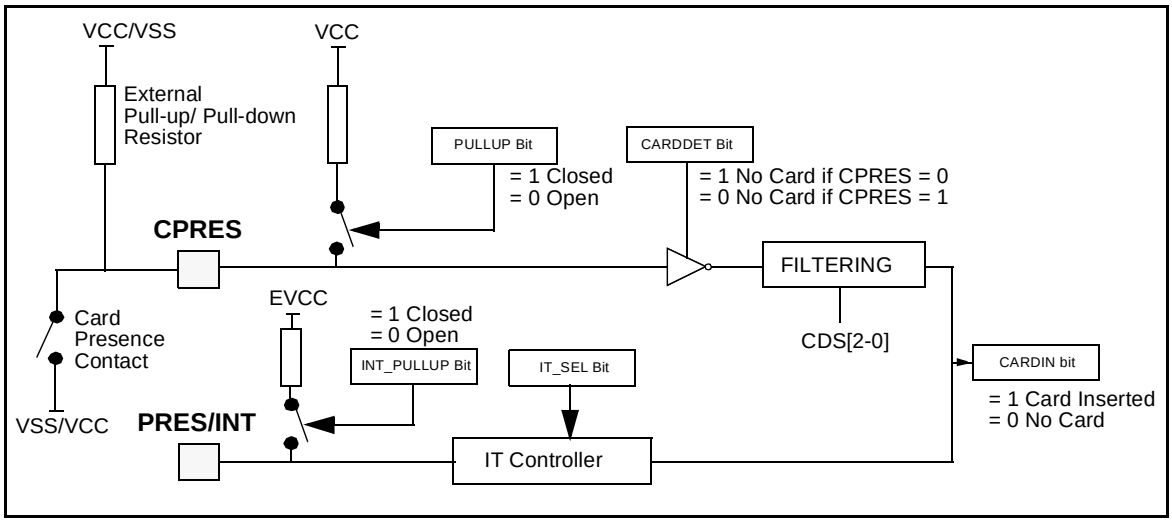

Activation Sequence

Hardware Activation (DC/DC started with $\overline{\text{CMDVCC}}$)

Initial conditions: the CRST_SEL bit (see CONFIG4 register) must be set and CARDRST bit (see INTERFACE register) must be cleared.

The hardware activation sequence is started by hardware with $\overline{\text{CMDVCC}}$ pin going high to low.

Then CCLK signal is automatically enabled when CVCC has settled to the programmed voltage (see Electrical Characteristics) and the level on A1/RST is 0. The CCLK source can be DCCLK signal, CLK signal , A2/CK signals or CARDCK bit (see Figures 5).

CRST signal must be controlled by hardware with the A1/RST pin.

VCARD[0-1] bits should not be set by software and CVCC is set according to the A0/3V pin: 5V (Class A) if A0/3V is High and 3V (Class B) is A0/3V is Low.

Note: The card must be deactivated to change the voltage.

Figure 10. Activation sequence with $\overline{\text{CMDVCC}}$

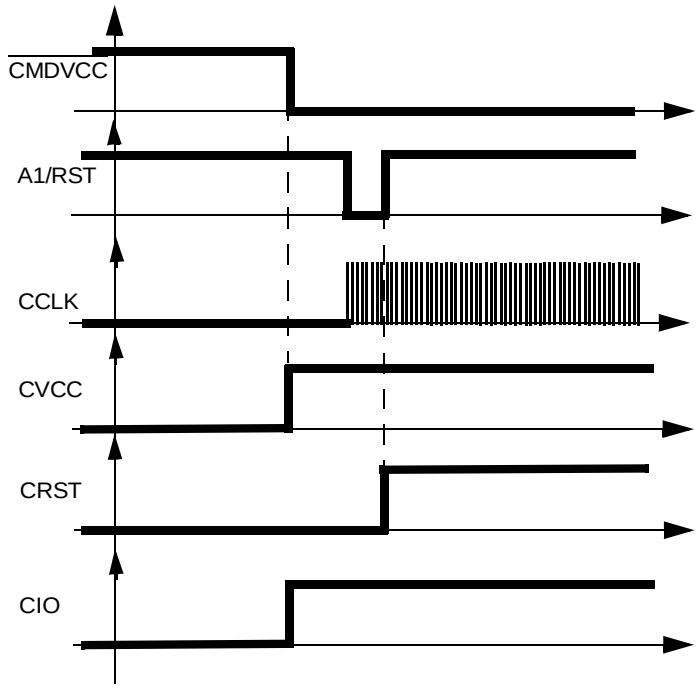

Software Activation (DC/DC Started With Writing in VCARD[1:0] bits) and ART bit = 1

The following sequence can be applied:

1. Card Voltage is set by software to the required value (VCARD[1:0] bits in CONFIG0 register). This writing starts the DC/DC.
2. Wait of the end of the DC/DC init with a polling on VCARDOK bit (STATUS register) or wait for PRES/$\overline{\text{INT}}$ to go Low if enabled (if IT_SEL bit = 0 in CONFIG4 register). When VCARDOK bit is set (by hardware), CARDIO bit should be set by software.
3. CKSTOP, IODIS are programmed by software. CKSTOP bit is reset to have the clock running. IODIS is reset to drive the I/O, C4, C8 pins and the CIO,CC4, CC8 pins according to each other.
4. CARDRST bit (see INTERFACE register) is set by software.

Automatic Reset Transition description:

A 16-bit counter starts when CARDRST bit is set. It counts card clock cycles. The CRST signal is set when the counter reaches the TIMER[1-0] value which corresponds to the “tb” time (Figure 5).The counter is reseted when the CRST pin is released and it is stopped at the first start bit of the Answer To Request (ATR) on CIO pin.

The CIO pin is not checked during the first 200 clock cycles (time on Figure 5). If the ATR arrives before the counter reaches Timer[1-0] value, the activation sequence fails, the CRST signal is not set and the Capture[1-0] register contains the value of the counter at the arrival of the ATR.

If the ATR arrives after the rising edge on CRST pin and before the card clock counter overflows (65535 clock cycles), the activation sequence completes. The Capture[1-0] register contains the value of the counter at the arrival of the ATR (tc time on Figure 12).

Figure 11. Software activation with ART bit = 1

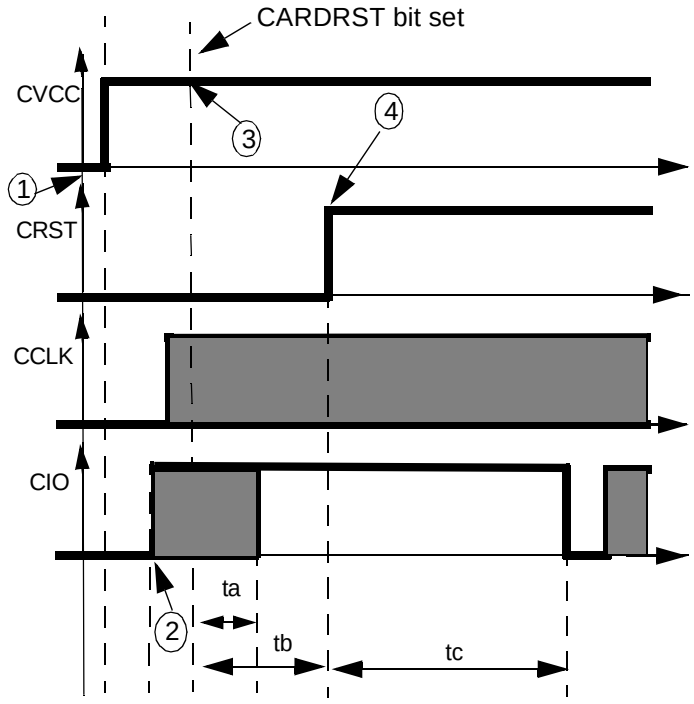

ISO 7816 constraints: ta = 200 card clock cycles

400 card clock cycles< = tb

400 card clock cycles< = tc < = 40000 card clock cycles

Note: Timer[1-0] reset value is 400.

Software Activation (DC/DC Started by Writing in VCARD[1:0] bits) and ART bit = 0

The activation sequence is controlled by software using TWI commands, depending on the cards to support. For ISO 7816 cards, the following sequence can be applied:

1. Card Voltage is set by software to the required value (VCARD[1:0] bits in CONFIG0 register). This writing starts the DC/DC.
2. Wait of the end of the DC/DC init with a polling on VCARDOK bit (STATUS register) or wait for PRES/$\overline{\text{INT}}$ to go Low if enabled (if IT_SEL bit = 0 in CONFIG4 register). When VCARDOK bit is set (by hardware), CARDIO bit should be set by software.
3. CKSTOP, IODIS are programmed by software. CKSTOP bit is reset to have the clock running. IODIS is reset to drive the I/O, C4, C8 pins and the CIO,CC4, CC8 pins according to each other.
4. CRST pin is controlled by software using CARDRST bit (see INTERFACE register).

Figure 12. Software activation without automatic control (ART bit = 0)

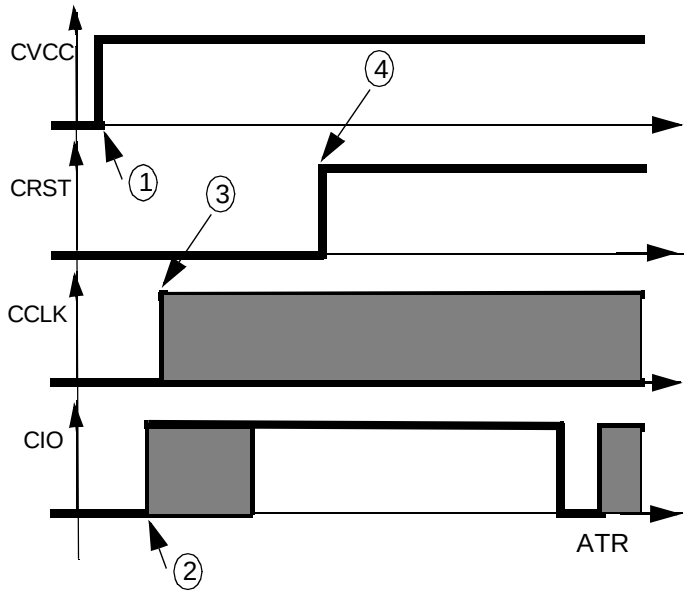

Note: It is assumed that initially VCARD[1:0], CARDCK, CARDIO and CARDRST bits are cleared, CKSTOP and IODIS are set (those bits are further explained in the registers description)

Note: The user should check the AT83C24 status and possibly resume the activation sequence if one TWI transfer is not acknowledged during the activation sequence.

Deactivation Sequence

The card automatic deactivation is triggered when one the following condition occurs:

- ICARDERR bit is set by hardware
- VCARDERR bit is set by hardware (or by software)
- INSERT is set and CARDIN is cleared (card extraction)
- SHUTDOWN is set by software
- $\overline{\text{CMDVCC}}$ goes from Low to High
- Power fail on VCC (see POWERMON bit in CONFIG4 register)
- Reset pin going low

It is a self-timed sequence which cannot be interrupted when started (see Figure 13). Each step is separated by a delay based on Td equal to 8 periods of the DC/DC clock, typically 2 to 2.4 µs:

1. T0: CARDRST is cleared, SHUTDOWN bit set.
2. T0 + 5 x Td:CARDCK is cleared, CKSTOP, CARDIO and IODIS are set.
3. T0 + 6 x Td: CARDIO is cleared.
4. T0 + 7 x Td: VCARD[1-0] = 00.

Figure 13. Deactivation Sequence

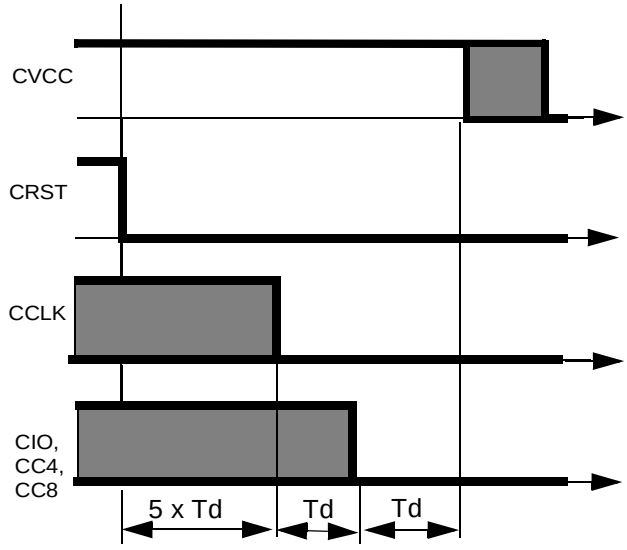

Notes: 1. Setting ICARDERR by software does not trigger a deactivation. VCARDERR can be used to deactivate the card by software.

Transparent Mode

If the microcontroller outputs ISO 7816 signals, a transparent mode allows to connect RST/CLK and I/O/C4/C8 signals after an electrical level control. The AT83C24 level shifters adapt the card signals to the smart card voltage selection.

The CRST and CCLK microcontroller signals can be respectively connected to the A1/RST and A2/CK pins.

The CRST_SEL bit (in CONFIG4 register) selects standard or transparent configuration for the CRST pin. CKS in CONFIG2 allows to select standard or transparent configuration for the CCLK pin. So CCLK and CRST are independent. A2/CK to A0/3V inputs always give the TWI address at reset. The A0/3V pin can be used for TWI addressing and easily connect two AT83C24 devices on the same TWI bus.

If A2/CK to A0/3V are tied to the host microcontroller and their reset values are unknown, a general call on the TWI bus allows to reset all the AT83C24 devices and set their address after A2/CK to A0/3V are fixed.

Figure 14. Transparent Mode Description

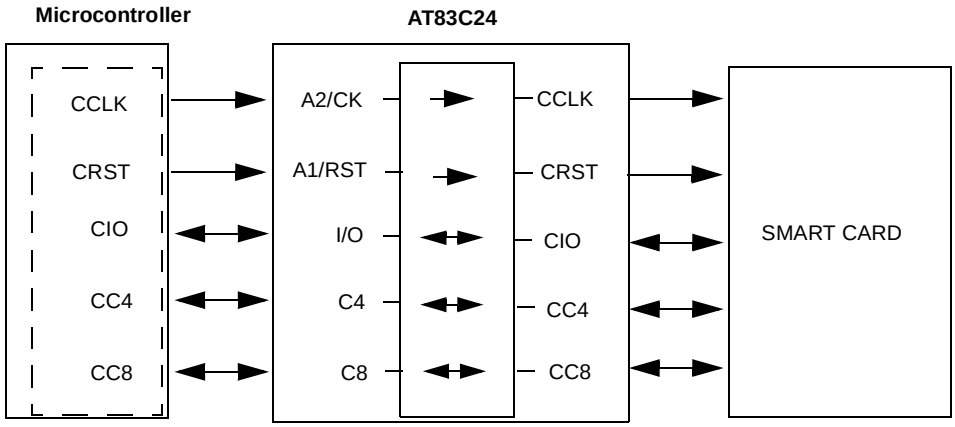

Power Modes

Two power-down modes are available to reduce the AT83C24 power consumption (see STUTDOWN bit in CONFIG1 register and LP bits in CONFIG3 register).

To enter in the mode number 4 (see table 5), the sequence is the following:

- First select the Low-power mode by setting the LP bit
- The activation of the SHUTDOWN bit can then be done.

The AT83C24 exits Power-down if a software/hardware reset is done or if SHUTDOWN bit is cleared. The AT83C24 is then active immediately.

Either a hardware reset or a TWI command clearing the SHUTDOWN bit can cause an exit from Power-down. The internal registers retain their value during the shutdown mode.

In Power-down mode, the device is sleeping and waiting for a wake up condition.

To reduce power consumption, the User should stop the clock on the CLK input after setting the SHUTDOWN bit. The clock can be enabled again just before exiting SHUTDOWN (at least 10 µs before a START bit on SDA).

Table 5. Power Modes Description

Mode Number	Shutdown Bit	Lp Bit	Result	Typical Supply Current	Description
1	0	X	No action	160 mA	Step up mode: VCC = 2.85V, CVCC = 5V, Icvcc = 65mA
2	0	X	No action	TBD mA	Regulator mode: VCC = 5.2V, CVCC = 5V, Icvcc = 65mA
3	1	0	Shutdown mode	90 µA	The TWI interface of the AT83C24 is active but its analog blocs are switched off to reduce the consumption
4	1	1	Shutdown mode with low power mode	30 µA	Pulsed mode of the internal 3V logic regulator

Power Monitoring

The AT83C24 needs only one power supply to run: VCC.

If the microcontroller outputs signals with a different electrical level, the host positive supply is connected to EVCC.

EVCC and VCC pins can be connected together if they have the same voltage.

- If EVCC and VCC have different electrical levels:

  The EVCC pin and RESET pin should be connected with a resistor bridge. RESET pin high level must be higher than VIH (see Table 19). When EVCC drops, RESET pin level drops too. A deactivation sequence starts if a card was active.

  Then the AT83C24 resets if RESET pin stays low.

- If EVCC and VCC have the same value, then they should be connected:

  The AT83C24 integrates an internal 3V regulator to feed its logic from the VCC supply. The bit powermon allows the user to select if the internal PFD monitors VCC or the internal regulated 3V. If the PFD monitors VCC (POWERMON bit=0), a deactivation is performed if VCC falls below VPFDP (see VPFDP value in the datasheet). Same deactivation is performed if the internal 3V falls below VPFDP and POWERMON bit = 1

Registers

Table 6. CONFIG0 (Config Byte 0)

7	6	5	4	3	2	1	0
1	**0**	**ATRERR**	**INSERT**	**ICARDERR**	**VCARDERR**	**VCARD1**	**VCARD0**

Bit Number	Bit Mnemonic	Description
7-6	1-0	These bits cannot be programmed and are read as 1-0.
5	ATRERR	**Answer to Reset Interrupt** This bit is set when the card clock counter overflows (no falling edge on CIO is received before the overflow of the card clock counter). This bit is cleared by hardware when this register is read. It can be set by software for test purpose. The reset value is 0.
4	INSERT	**Card Insertion Interrupt** This bit is set when a card is inserted or extracted: a change in CARDIN value filtered according to CDS[2-0]. After power up, if the level on CPRES pin is 0, then INSERT bit is set. It can be set by software for test purpose. This bit is cleared by hardware when this register is read. It cannot be cleared by software. The reset value is 0.
3	ICARDERR	**Card Over Current Interrupt** This bit is set when an over current is detected on CVCC. It can be set by software for test purpose (no card deactivation is performed). This bit is cleared by hardware when this register is read. It cannot be cleared by software. The reset value is 0.
2	VCARDERR	**Card Out of Range Voltage Interrupt** This bit is set when the output voltage goes out of the voltage range specified by VCARD field. It can be set by software for test purpose and deactivate the card. This bit is cleared by hardware when this register is read. It cannot be cleared by software. The reset value is 0.
1-0	VCARD[1:0]	**Card Voltage Selection** VCARD[1:0] = 00: 0V VCARD[1:0] = 01: 1.8V VCARD[1:0] = 10: 3V VCARD[1:0] = 11: 5V VCARD[1:0] writing to 1.8V, 3V, 5V starts the DC/DC if a card is detected. VCARD[1:0] writing to 0 stops the DC/DC. No card deactivation is performed when the voltage is changed between 1.8V, 3V or 5V. The microcontroller should deactivate the card before changing the voltage. The reset value is 00.

Table 7. CONFIG 1 (Config Byte 1)

7	6	5	4	3	2	1	0
X	ART	SHUTDOWN	CARDDET	PULLUP	CDS2	CDS1	CDS0

Bit Number	Bit Mnemonic	Description
7	X	This bit should not be set.
6	ART	**Automatic Reset Transition** Set this bit to have the CRST pin changed according to activation sequence. Clear this bit to have the CRST pin immediately following the value programmed in CARDRST. The reset value is 0.
5	SHUTDOWN	**Shutdown** Set this bit to reduce the power consumption. An automatic de-activation sequence will be done. Clear this bit to enable VCARD[1:0] selection. The reset value is 0.
4	CARDDET	**Card Presence Detection Polarity** Set this bit to indicate the card presence detector is closed when no card is inserted (CPRES is low). Clear this bit to indicate the card presence detector is open when no card is inserted (CPRES is high).Changing CARDDET will set INSERT bit (see CONFIG0) even if no card is inserted or extracted. The reset value is 0.
3	PULLUP	**Pull-up Enable** Set this bit to enable the internal pull-up on the CPRES pin. This allows to minimize the number of external components. Clear this bit to disable the internal pull-up and minimize the power consumption when the card detection contact is on. Then an external pull-up must be connected to V_{CC} (typically a 1 MΩ resistor). The reset value is 1.
2-0	CDS[2:0]	**Card Detection filtering** CPRES is sampled by the master clock provided on CLK input. A change on CPRES is detected after: CDS[2-0] = 0: 0 sample(1) CDS[2-0] = 1: 4 identical samples CDS [2-0] = 2: 8 identical samples (reset value) CDS[2-0] = 3: 16 identical samples CDS[2-0] = 4: 32 identical samples CDS[2-0] = 5: 64 identical samples CDS[2-0] = 6: 128 identical samples CDS[2-0] = 7: 256 identical samples The reset value is 2. Note: When CDS[2-0] = 0 and IT_SEL = 0, PRES/$\overline{\text{INT}}$ = 1 when no card is present and PRES/$\overline{\text{INT}}$ = 0 when a card is inserted even if CLK is STOPPED. This can be used to wake up the external microcontroller and restart CLK when a card is inserted in the AT83C24. If CDS[2-0] = 0, IT_SEL = 1 and CLK is stopped, a card insertion or extraction has no effect on PRES/$\overline{\text{INT}}$ pin.

Table 8. CONFIG2 (Config Byte 2)

7	6	5	4	3	2	1	0
X	**DCK2**	**DCK1**	**DCK0**	**X**	**CKS2**	**CKS1**	**CKS0**

Bit Number	Bit Mnemonic	Description
7	X	This bit should not be set.
6-4	DCK[2:0]	**DC/DC Clock prescaler factor** DCCLK is the DC/DC clock. It is the division of CLK input by DCK prescaler. DCK = 0: prescaler factor equals 1 (CLK = 4 to 4.61MHz) DCK [2:0] = 1: prescaler factor equals 2 (CLK = 7 to 9.25MHz) DCK [2:0] = 2: prescaler factor equals 4 (CLK = 14 to 18.5 MHz) DCK [2:0] = 3: prescaler factor equals 6 (CLK = 21 to 27.6 MHz) DCK [2:0] = 4: prescaler factor equals 8 (CLK = 28 to 34.8 MHz) DCK [2:0] = 5: prescaler factor equals 10 (CLK = 35 to 43 MHz) DCK [2:0] = 6: prescaler factor equals 12 (CLK = 43.1 to 48 MHz) DCK [2:0] = 7: reserved The reset value is 1. DCCLK must be as close as possible to 3.68 MHz with a duty cycle of 50%. DCCLK must be programmed before to start the DC/DC. The other values of CLK are not allowed. DCK has to be properly configured before resetting the STEPREG bit.
3	X	This bit should not be set.
2-0	CKS[2:0]	**Card Clock prescaler factor** CKS [2:0] = 0: CCLK = CLK (then the maximum frequency on CLK is 24 MHz) CKS [2:0] = 1: CCLK = DCCLK (DC/DC clock) CKS [2:0] = 2: CCLK = DCCLK / 2 CKS [2:0] = 3: CCLK = DCCLK / 4 CKS [2:0] = 4: CCLK = A2 CKS [2:0] = 5: CCLK = A2 / 2 CKS [2:0] = 6: CCLK = CLK / 2 CKS [2:0] = 7: CCLK = CLK / 4 The reset value is 0.

Notes:
1. When this field is changed a special logic insures no glitch occurs on the CCLK pin and actual configuration changes can be delayed by half a period to two periods of CCLK.
2. CCLK must be stopped with CKSTOP bit before switching from CKS = (0, 1, 2, 3, 6, 7) to CKS = (4, 5) or vice versa.
3. When DCK = 0, a change on CKS as no effect.

Table 9. CONFIG3 (Config Byte 3)

7	6	5	4	3	2	1	0
EAUTO	**VEXT1**	**VEXT0**	**ICCADJ**	**LP**	**X**	**X**	**X**

Bit Number	Bit Mnemonic	Description
7-5	EAUTO VEXT1 VEXT0	**EVCC voltage configuration:** EAUTO VEXT1 VEXT0 0 0 0 EVCC = 0 the regulator is switched off. 0 0 1EVCC = 2.3V 0 1 0 EVCC = 1.8V 0 1 1 EVCC = 2.7V 1 X X EVCC voltage is the level detected on I/O input pin. if EVCC is supplied from the external EVCC pin, the user can switch off the internal EVCC regulator to decrease the consumption. If EVCC is switched off, and no external EVCC is supplied, the AT83C24 is inactive until a hardware reset is done. The reset value is 100.
4	ICCADJ	**CI_{CC} overflow adjust** This bit controls the DC/DC sensitivity to any overflow current. Set this bit to decrease the DC/DC sensitivity (CI_{CC_ovf} is increased by about 20%). Clear this bit to have a normal configuration. The reset value is 0.
3	LP	**Low-power Mode** Set this bit to enable low-power mode during shutdown mode (pulsed mode activated). Clear this bit to disable low-power mode during shutdown mode. The activation reference is the following: • First select the Low-power mode by setting LP bit. • The activation of SHUTDOWN bit can then be done. This bit as no effect when SHUTDOWN bit is cleared. The reset value is 0.
2	X	This bit should not be set.
1	X	This bit should not be set.
0	X	This bit should not be set.

Table 10. CONFIG4 (Config Byte 4)

7	6	5	4	3	2	1	0
X	**X**	**X**	**STEPREG**	**INT_PULLUP**	**POWERMON**	**IT_SEL**	**CRST_SEL**

Bit Number	Bit Mnemonic	Description
7-5	X-X-X	These bits should not be set.
4	STEPREG	**Step Regulator mode** Clear this bit to enable the automatic step-up converter (CVCC is stable even if VCC is not higher than CVCC). Set this bit to permanently disable the step-up converter (CVCC is stable only if VCC is sufficiently higher than CVCC). The reset value is 0. This bit must always be set if no external self is used
3	INT_PULLUP	**Internal pull-up** Set this bit to activate the internal pull-up (connected internally to EVCC) on PRES/$\overline{\text{INT}}$ pin. Clear this bit to deactivate the internal pull-up. The reset value is 0.
2	POWERMON	**Power monitor** Set this bit so that the internal power monitor checks the Digital Supply Voltage (DVCC) of the AT83C24. Clear this bit so that the internal power monitor checks the V_{CC} of the AT83C24. The reset value is 0.
1	IT_SEL	**Interrupt Select** Set this bit to disable INSERT and VCARD_INT interrupts. Then PRES/INT is driven High when a card is present and no error is detected. Clear this bit to have all the interrupt sources enabled and active Low. Then PRES/INT is an open-drain output with a programmable pull-up (see INT_PULLUP). The reset value is 0.
0	CRST_SEL	**Card Reset Selection** Set this bit to have the CRST pin driven by hardware through the A1 pin. Clear this bit to have the CRST pin driven by software through the CARDRST bit. The reset value is 0.

Table 11. INTERFACE (Interface Byte)

7	6	5	4	3	2	1	0
0	**IODIS**	**CKSTOP**	**CARDRST**	**CARDC8**	**CARDC4**	**CARDCK**	**CARDIO**

Bit Number	Bit Mnemonic	Description
7	0	This bit cannot be programmed and is read as 0.
6	IODIS	**Card I/O isolation** Set this bit to drive the CIO, CC4, CC8 pins according to CARDIO, CARDC4, CARDC8 respectively and to put I/O, C4, C8 in Hi-Z. This can be used to have the I/O, and C4 and C8 pins of the host communicating with another AT83C24 interface, while CIO, CC4 and CC8 are driven by software (or if the card is in standby or power-down modes). Clear this bit to drive the I/O/CIO, C4/CC4 and C8/CC8 pins according to each other. This can be used to activate asynchronous cards. The reset value is 1.
5	CKSTOP	**CARD Clock Stop** Set this bit to stop CCLK according to CARDCK. This can be used to set asynchronous cards in power-down mode (GSM) or to drive CCLK by software. Clear this bit to have CCLK running according to CKS. This can be used to activate asynchronous cards. Note: When this bit is changed a special logic ensures that no glitch occurs on the CCLK pin and actual configuration changes can be delayed by half a period to two periods of CCLK. The reset value is 1.
4	CARDRST	**Card Reset** Set this bit to enter a reset sequence according to ART bit value. Clear this bit to drive a low level on the CRST pin. The reset value is 0.
3	CARDC8	**Card C8** Set this bit to drive the CC8 pin High with the on-chip pull-up (according to IODIS bit value). The pin can then be an input (read in STATUS register). Clear this bit to drive a low level on the CC8 pin (according to IODIS bit value). The reset value is 0.
2	CARDC4	**Card C4** Set this bit to drive the CC4 pin High with the on-chip pull-up (according to IODIS bit value). The pin can then be an input (read in STATUS register). Clear this bit to drive a low level on the CC4 pin (according to IODIS bit value). The reset value is 0.
1	CARDCK	**Card Clock** Set this bit to set a high level on the CCLK pin (according to CKSTOP bit value). Clear this bit to drive a low level on the CCLK pin. The reset value is 0.
0	CARDIO	**Card I/O** Set this bit to drive the CIO pin High with the on-chip pull-up (according to IODIS bit value). The pin can then be an input (read in STATUS register). Clear this bit to drive a low level on the CIO pin (according to IODIS bit value). The reset value is 0.

Table 12. STATUS (Status Byte)

7	6	5	4	3	2	1	0
CC8	**CC4**	**CARDIN**	**VCARDOK**	**X**	**VCARD_INT**	**CRST**	**CIO**

Bit Number	Bit Mnemonic	Description
7	CC8	**Card CC8** This bit provides the actual level on the CC8 pin when read. The reset value is 0.
6	CC4	**Card CC4** This bit provides the actual level on the CC4 pin when read. The reset value is 0.
5	CARDIN	**Card Presence Status** This bit is set when a card is detected. It is cleared otherwise.
4	VCARD_OK	**Card Voltage Status** This bit is set by the DCDC when the output voltage remains within the voltage range specified by VCARD[1:0] bits. It is cleared otherwise. The reset value is 0.
3	X	This bit should not be set.
2	VCARD_INT	Card voltage interrupt This bit is set when VCARD_OK bit is set. This bit is cleared when read by the microcontroller. The reset value is 0.
1	CRST	**Card RST** This bit provides the actual level on the CRST pin when read. The reset value is 0.
0	CIO	**Card I/O** This bit provides the actual level on the CIO pin when read. The reset value is 0.

Table 13. TIMER 1 (Timer MSB)

7	6	5	4	3	2	1	0
Bit 15	**Bit 14**	**Bit 13**	**Bit 12**	**Bit 11**	**Bit 10**	**Bit 9**	**Bit 8**

Bit Number	Bit Mnemonic	Description
7 - 0	Bits 15 - 8	Timer MSB (bits 15 to 8)

Reset value = 0x00000001

Table 14. TIMER 0 (Timer LSB)

7	6	5	4	3	2	1	0
Bit 7	**Bit 6**	**Bit 5**	**Bit 4**	**Bit 3**	**Bit 2**	**Bit 1**	**Bit 0**

Bit Number	Bit Mnemonic	Description
7 - 0	bits 7 - 0	Timer LSB (bits 7to 0)

Reset value = 0x10010000

Table 15. CAPTURE 1 (Capture MSB)

7	6	5	4	3	2	1	0
bit 15	**bit 14**	**bit 13**	**bit 12**	**bit 11**	**bit 10**	**bit 9**	**bit 8**

Bit Number	Bit Mnemonic	Description
7 - 0	bits 15 - 8	See automatic activation sequence.

Reset value = 0x00000000

Table 16. CAPTURE 0 (Capture LSB)

7	6	5	4	3	2	1	0
bit 7	**bit 6**	**bit 5**	**bit 4**	**bit 3**	**bit 2**	**bit 1**	**bit 0**

Bit Number	Bit Mnemonic	Description
7 - 0	bits 7 - 0	See automatic activation sequence (page 7).

Reset value = 0x00000000

Electrical Characteristics

Absolute Maximum Ratings *

Ambient Temperature Under Bias: .....-40°C to 85°C

Storage Temperature: ..... -65°C to +150°C

Voltage on V_{CC}: ..... V_{SS} -0.5V to +6.0V

Voltage on Any Pin: ..... V_{SS} -0.5V to V_{CC} + 0.5V

Power Dissipation: 1.5W

Thermal resistor of QFN package..(*).....35°C/W

Thermal resistor of SO package.....48°C/W

*NOTICE: Stresses at or above those listed under "Absolute Maximum Ratings" may cause permanent damage to the device. This is a stress rating only and functional operation of the device at these or any other conditions above those indicated in the operational sections of this specification is not implied. Exposure to absolute maximum rating conditions may affect device reliability.
Power Dissipation value is based on the maximum allowable die temperature and the thermal resistance of the package.

(*) Exposed die attached pad must be soldered to ground

AC/DC Parameters

EVCC connected to host power supply: from 1.6V to 5.5V.

T_A = -40°C to +85°C; V_{SS} = 0V; V_{CC} = 2.85V to 5.5V.

CLASS A card supplied with CVCC = 4.75 to 5.25V for AT83C24TV

CLASS A card supplied with CVCC = 4.6 to 5.25V for AT83C24

CLASS B card supplied with CVCC = 2.8V to 3.2V

CLASS C card supplied with CVCC = 1.68V to 1.92V

Table 17. Core Parameters (V_{CC})

Symbol	Parameter	Min	Typ	Max	Unit	Test Conditions
V_{PFDP}	Power fail high level threshold	2.4	2.5	2.6	V	
V_{PFDM}	Power fail low level threshold	2.25	2.35	2.45	V	
t_{rise}, t_{fall}	V_{DD} rise and fall time	1 µs		600s		Not tested.

Table 18. Host Interface Parameters (I/O, C4, C8, CLK, A2, A1, A0, $\overline{CMDVCC}$, PRES/$\overline{INT}$)

Symbol	Parameter	Min	Typ	Max	Unit	Test Conditions
V_{IL}	Input Low-voltage	-0.5		0.3 x EVCC 0.25 x EVCC	V	EVCC from 2.7V to V_{CC} EVCC from 1.6 to 2.7V
V_{IH}	Input High Voltage	0.7 x EVCC		EVCC + 0.5 EVCC	V	EAUTO=0 EAUTO=1 EVCC from 1.6V to V_{CC}
V_{OL}	Output Low-voltage (I/O, C4, C8, PRES/INT)			0.05 0.4	V V	I_{OL} = -100 µA I_{OL} = -1.2 mA
V_{OH}	Output High Voltage (I/O, C4, C8, PRES/INT)	0.8 x EVCC		EVCC	V	EVCC from 1.6V to V_{CC} I_{OH} = 100 µA
EI_{CC}	Extra Supply Current			+3	mA	C_L = 100 nF

Table 18. Host Interface Parameters (I/O, C4, C8, CLK, A2, A1, A0, $\overline{CMDVCC}$, PRES/$\overline{INT}$) (Continued)

Symbol	Parameter	Min	Typ	Max	Unit	Test Conditions
$R_{PRES/INT}$	PRES/$\overline{INT}$ weak pull-up output current	300	330	360	κΩ	Short to VSS INT_PULLUP = 0: Internal pull-up active.
EV_{CC}	EV_{CC} pin not connected to a power supply	Vpeak - 10 mV	Vpeak	Vpeak + 25 mV	V	C_L = 100 nF, EIcc = +3 mA Vpeak on I/O from 1.6V to V_{CC} EAUTO = 1: min duration 1µs, min frequency 0.1Hz, spikes <50ns are filtered.
EV_{CC}	EV_{CC} pin connected to a power supply	Vpeak - 200mV				EAUTO = 1

Table 19. Host Interface DC Parameters (SCL, SDA, RESET)

Symbol	Parameter	Min	Typ	Max	Unit	Test Conditions
V_{IL}	Input Low-voltage	-0.5		1.9 0.3 x V_{CC}	V	VCC > 4.5V VCC <= 4.5V
V_{IH}	Input High Voltage	2.85 0.7 x V_{CC}		V_{CC} + 0.5	V	VCC > 4.5V VCC <= 4.5V
V_{OL}	Output Low-voltage			0.4	V	I_{OL} = -3 mA
V_{HIST}	Input trigger hysteresis	0.1 x V_{CC}				

Table 20. Smart Card Class A DC Parameters

Symbol	Parameter	Min	Typ	Max	Unit	Test Conditions
CI_{CC}	Card Supply Current Capability	65 65			mA	V_{CC} = 2.85V, STEPREG = 0 V_{CC} = 5.35V, STEPREG = 1
CI_{CC}_ovf	Card Supply Current Overflow: ICCADJ = 0 (reset value) ICCADJ = 1	 65 65	 120 130	 130 150	mA	V_{CC} from 2.85 to 5.5V
	Ripple on CVCC		60 150	200 350	mV	0 < Icard < 60mA C_L =10µF 0 < Icard < 65mA C_L = 3.3µF
	Spikes on CVCC	4.6		5.3	V	Max. charge 40 nA.s Max. duration 400 ns Max. Icard variation 200 mA
Vcardok up	Vcardok high level threshold	4.8	4.9		V	
Vcardok down	Vcardok low level threshold	4.6 4.75	4.8 4.8		V	AT83C24 AT83C24TV
T_{VHL}	CVCC valid to 0		180 500	250 750	µs	Icard = 0, V_{CC} > V_{PFDP} C_L = 3.3 µF Icard = 0 C_L = 10 µF Icard = 0 (see note 1)

Table 20. Smart Card Class A DC Parameters

Symbol	Parameter	Min	Typ	Max	Unit	Test Conditions
T_{VLH}	CVCC 0 to Valid		180 110 TBD TBD	250 250 TBD TBD	µs	VCC = 3V, C_L = 3.3µF Icard = 65mA AT83C24TV Icard = 0mA AT83C24TV VCC = 2.85V, C_L = 10µF Icard = 60mA AT83C24 Icard = 0mA AT83C24

Notes: 1. Capacitor: X7R type, max ESR value is 100mΩ

Table 21. Smart Card Class B DC Parameters

Symbol	Parameter	Min	Typ	Max	Unit	Test Conditions
CI_{CC}	Card Supply Current Capability	65 65 65 65			mA	V_{CC} = 5.5V, STEPREG = 0 V_{CC} = 3V, STEPREG = 0 V_{CC} = 2.85V, STEPREG = 0 V_{CC} = 3.25V, STEPREG = 1
CI_{CC}_ovf	Card Supply Current Overflow: ICCADJ = 0 (reset value) ICCADJ = 1	 0.065 0.065	 0.13 0.14	 0.14 0.15	A	V_{CC} from 3.0 to 5.5V
	Ripple on CVCC		60	200 350	mV	0 < Icard < 65mA C_L =10µF 0 < Icard < 65mA C_L = 3.3µF
	Spikes on CVCC	2.76		3.24	V	Maxi. charge 40 nA.s Max. duration 400 ns Max. variation Icard 200mA
Vcardok up	Vcardok high level threshold	2.8	2.9		V	
Vcardok down	Vcardok low level threshold	2.76	2.85		V	
T_{VHL}	CVCC valid to 0		130 TBD	250 TBD	µs	Icard = 0, $V_{CC} > V_{PFDP}$ C_L = 3.3 µF Icard = 0 C_L = 10 µF Icard = 0 (see note 1)
T_{VLH}	CVCC 0 to Valid		140 110 130 100	250 250 250 250	µs	VCC = 3V, C_L = 3.3µF Icard = 65mA AT83C24TV Icard = 0mA AT83C24TV VCC = 2.85V, C_L = 10µF Icard = 60mA AT83C24 Icard = 0mA AT83C24

Notes: 1. Capacitor: X7R type or X5R type, max ESR value is 100mΩ

Table 22. Smart Card C DC Parameters

Symbol	Parameter	Min	Typ	Max	Unit	Test Conditions
CI_{CC}	Card Supply Current Capability	40 40 40 15			mA	V_{CC} = 5.5V V_{CC} = 4V V_{CC} = 3V V_{CC} = 2.85V
CI_{CC}_ovf	Card Supply Current Overflow: ICCADJ = 0 (reset value) ICCADJ = 1	 TBD TBD	 TBD TBD	 TBD TBD	A	
	Spikes on CVCC	TBD		TBD	V	TBD
Vcardok up	Vcardok high level threshold	TBD	TBD		V	
Vcardok down	Vcardok low level threshold	TBD	TBD		V	
T_{VHL}	CVCC valid to 0		TBD		µs	Icard = 0, C_L = 10 µF(1) CVCC = 1.8V to 0.4V
T_{VLH}	CVCC 0 to valid		TBD TBD	TBD TBD	µs	R_L = 90Ω R_L = 0 Icard = 0, C_L = 10 µF(1) CVCC = 0.4 to VCARDOK

Note: Capacitor: X7R type, max ESR value is 100mΩ

Table 23. Smart Card Clock DC Parameters (CCLK pin)

Symbol	Parameter	Min	Typ	Max	Unit	Test Conditions
V_{OL}	Output Low-voltage	0		0.4	V	I_{OL} = -200 µA CLASS A&B&1.8V
V_{OH}	Output High Voltage	CVCC - 0.45 TBD		CVCC TBD	V	I_{OH} = +200 µA CLASS A&B CLASS 1.8V
I_{OS}	Short Circuit Current	-30		30	mA	Short to GND or CVCC
t_R t_F	Rise and Fall time			16 22.5 TBD	ns	C_L = 30 pF CLASS A C_L = 30 pF CLASS B CLASS 1.8V
	Rise and Fall Slew rate	0.2 0.12 TBD			V/ns	CLASS A CCLK from 0.5 to 4.2V CLASS B CCLK from 0.5 to 0.85 x CVCC CLASS 1.8V
	Low level voltage stability	-0.25 TBD		0.5 TBD	V	CLASS A&B CLASS 1.8V

Table 23. Smart Card Clock DC Parameters (CCLK pin) (Continued)

Symbol	Parameter	Min	Typ	Max	Unit	Test Conditions
	High level voltage stability	CVCC-0.5 CVCC-0.4 TBD		CVCC+0.25 CVCC+0.25 TBD	V	CVCC = CLASS A CVCC = CLASS B CLASS 1.8V

Table 24. Smart Card I/O DC Parameters (CIO, CC4, CC8 pins)

Symbol	Parameter	Min	Typ	Max	Unit	Test Conditions
V_{IL}	Input Low-voltage	-0.3V		0.8	V	I_{IL} = 500 µA
I_{IL}	Input Low Current			700	µA	CVCC = CLASS A&B&1.8
V_{IH}	Input High Voltage	0.6 x CVCC 0.7 x CVCC		CVCC CVCC	V	CVCC = CLASS A CVCC = CLASS B & 1.8V
I_{IH}	Input High Current	-20		+20	µA	
V_{OL}	Output Low-voltage	0		0.45 0.3 TBD	V	I_{OL} = -1 mA CLASS A I_{OL} = -1 mA CLASS B I_{OL} = -1 mA CLASS 1.8V
V_{OH}	Output High Voltage	0.75 x CVCC 0.9 x CVCC		CVCC CVCC	V	I_{OH} = 40 µA CLASS A&B&1.8V I_{OH} = 0µA, CLASS A&B
I_{OS}	Output Short Circuit Current	-15		+15	mA	Short to GND or CVCC
	Low level voltage stability	-0.25 -0.25 TBD		0.6 0.4 TBD	V	CLASS A CLASS B CLASS 1.8V
	High level voltage stability	CVCC-0.5		CVCC+0.25	V	CVCC = CLASS A&B&1.8
t_R t_F	Rise and Fall time			0.1	µS	C_L = 65 pF CLASS A: 0.6V <--> 0.7 x CVCC CLASS B & 1.8V: 0.4V <--> 0.7 x CVCC

Table 25. Smart Card RST DC Parameters (CRST pin)

Symbol	Parameter	Min	Typ	Max	Unit	Test Conditions
V_{OL}	Output Low-voltage	0 0		0.12 x CVCC 0.4	V	I_{OL} = -20 µA CLASS A&B&1.8V I_{OL} = -200 µA CLASS A&B&1.8V
V_{OH}	Output High Voltage	CVCC - 0.45		CVCC	V	I_{OH} = 200 µA CLASS A&B&1.8V
I_{OS}	Output High Current	-15		+15	mA	Short to GND or CVCC
t_R t_F	Rise and Fall time			0.1	µs	C_L = 30pF
	Low level voltage stability	-0.25		0.5V 0.3V TBD	V	CLASS A CLASS B CLASS 1.8V

Table 25. Smart Card RST DC Parameters (CRST pin) (Continued)

Symbol	Parameter	Min	Typ	Max	Unit	Test Conditions
	High level voltage stability	CVCC-0.5 CVCC-0.4 TBD		CVCC+0.25	V	CLASS A CLASS B CLASS 1.8V

Table 26. Card Presence DC Parameters

Symbol	Parameter	Min	Typ	Max	Unit	Test Conditions
R_{CPRES}	CPRES weak pull-up output current	300	330	360	κΩ	Short to VSS PULLUP = 1: Internal pull-up active

Typical Application

Figure 1. Typical Standard Mode Application Diagram

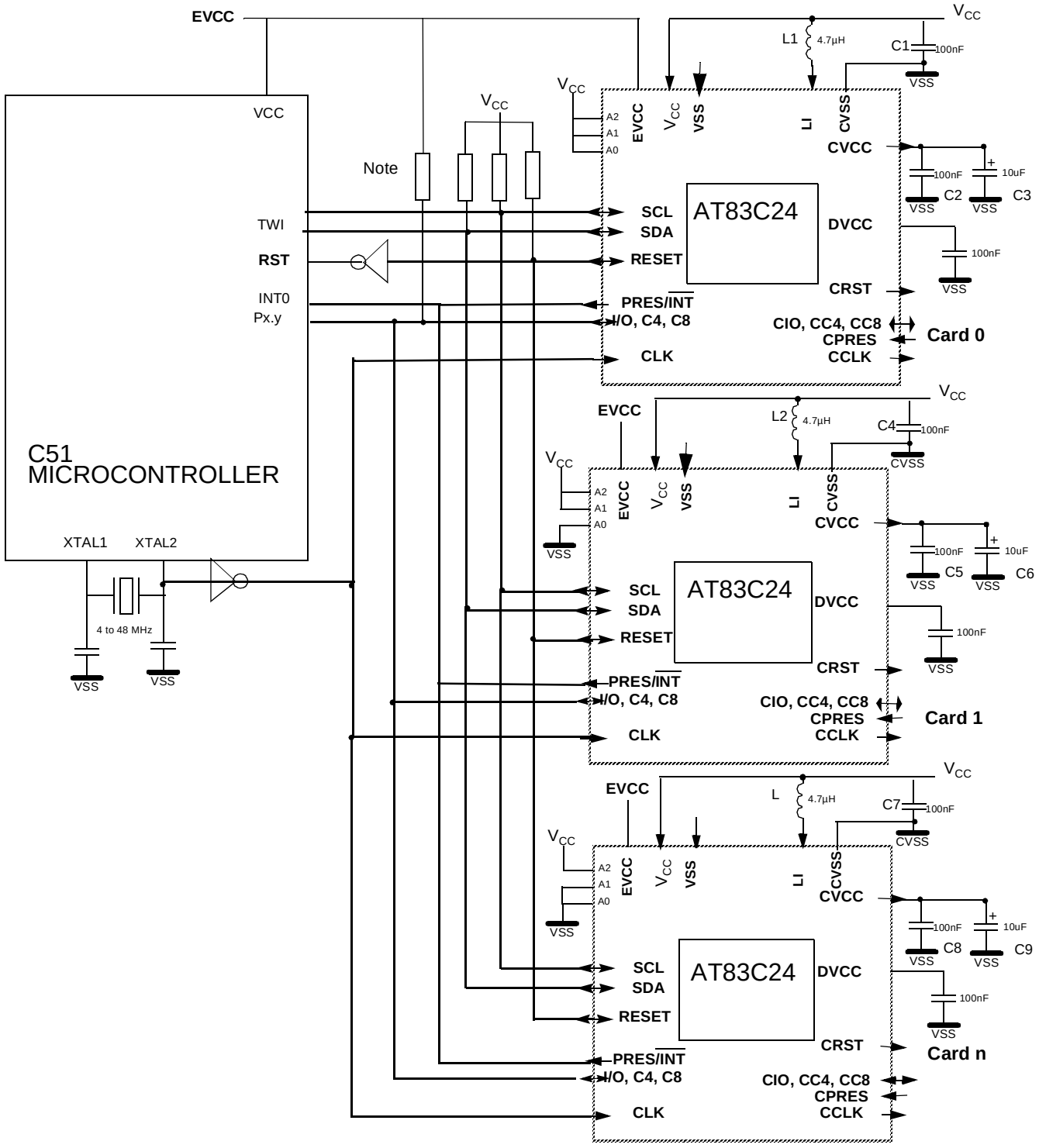

Note: 1. The external resistor on I/O can be removed if the C51 pin has an internal resistor.

Ordering Information

Part Number	Supply Voltage	Temperature Range	Package	Packing	Product Marking
AT83C24-PRTIL[2]	2.85V to 5.5V	Industrial	QFN28	Tray	AT83C24IL
AT83C24-PRRIL[2]	2.85V to 5.5V	Industrial	QFN28	Tape&Reel	AT83C24IL
AT83C24-PRTIM[2]	4.00V to 5.5V	Industrial	QFN28	Tray	AT83C24IM
AT83C24-PRRIM[2]	4.00V to 5.5V	Industrial	QFN28	Tape&Reel	AT83C24IM
AT83C24-TISIL	2.85V to 5.5V	Industrial	SO28	Stick	AT83C24IL
AT83C24-TIRIL	2.85V to 5.5V	Industrial	SO28	Tape&Reel	AT83C24IL
AT83C24-TISIM	4.00V to 5.5V	Industrial	SO28	Stick	AT83C24IM
AT83C24-TIRIM	4.00V to 5.5V	Industrial	SO28	Tape&Reel	AT83C24IM
AT83C24TV-PRTIL [1][2]	2.85V to 5.5V	Industrial	QFN28	Tray	AT83C24IL
AT83C24TV-PRRIL [1][2]	2.85V to 5.5V	Industrial	QFN28	Tape&Reel	AT83C24IL
AT83C24TV-PRTIM [1][2]	4.00V to 5.5V	Industrial	QFN28	Tray	AT83C24IM
AT83C24TV-PRRIM [1][2]	4.00V to 5.5V	Industrial	QFN28	Tape&Reel	AT83C24IM
AT83C24TV-TISIL [1]	2.85V to 5.5V	Industrial	SO28	Stick	AT83C24IL
AT83C24TV-TIRIL [1]	2.85V to 5.5V	Industrial	SO28	Tape&Reel	AT83C24IL
AT83C24TV-TISIM [1]	4.00V to 5.5V	Industrial	SO28	Stick	AT83C24IM
AT83C24TV-TIRIM [1]	4.00V to 5.5V	Industrial	SO28	Tape&Reel	AT83C24IM
LEAD FREE/ HALOGEN FREE:					
AT83C24-PRTUL[2]	2.85V to 5.5V	Industrial	QFN28	Tray	AT83C24UL
AT83C24-PRRUL[2]	2.85V to 5.5V	Industrial	QFN28	Tape&Reel	AT83C24UL
AT83C24-PRTUM[2]	4.00V to 5.5V	Industrial	QFN28	Tray	AT83C24UM
AT83C24-PRRUM[2]	4.00V to 5.5V	Industrial	QFN28	Tape&Reel	AT83C24UM
AT83C24-TISUL	2.85V to 5.5V	Industrial	SO28	Stick	AT83C24UL
AT83C24-TIRUL	2.85V to 5.5V	Industrial	SO28	Tape&Reel	AT83C24UL
AT83C24-TISUM	4.00V to 5.5V	Industrial	SO28	Stick	AT83C24UM
AT83C24-TIRUM	4.00V to 5.5V	Industrial	SO28	Tape&Reel	AT83C24UM
AT83C24TV-PRTUL [1][2]	2.85V to 5.5V	Industrial	QFN28	Tray	AT83C24UL
AT83C24TV-PRRUL [1][2]	2.85V to 5.5V	Industrial	QFN28	Tape&Reel	AT83C24UL
AT83C24TV-PRTUM[1][2]	4.00V to 5.5V	Industrial	QFN28	Tray	AT83C24UM

Part Number	Supply Voltage	Temperature Range	Package	Packing	Product Marking
AT83C24TV-PRRUM (1)(2)	4.00V to 5.5V	Industrial	QFN28	Tape&Reel	AT83C24UM
AT83C24TV-TISUL (1)	2.85V to 5.5V	Industrial	SO28	Stick	AT83C24UL
AT83C24TV-TIRUL (1)	2.85V to 5.5V	Industrial	SO28	Tape&Reel	AT83C24UL
AT83C24TV-TISUM (1)	4.00V to 5.5V	Industrial	SO28	Stick	AT83C24UM
AT83C24TV-TIRUM (1)	4.00V to 5.5V	Industrial	SO28	Tape&Reel	AT83C24UM

Note: 1. Enhanced AC/DC parameters.

2. Marking on package rotated starting March, 2004. Please refer to index mark for proper placement of chip.

Package Drawings

QFN28

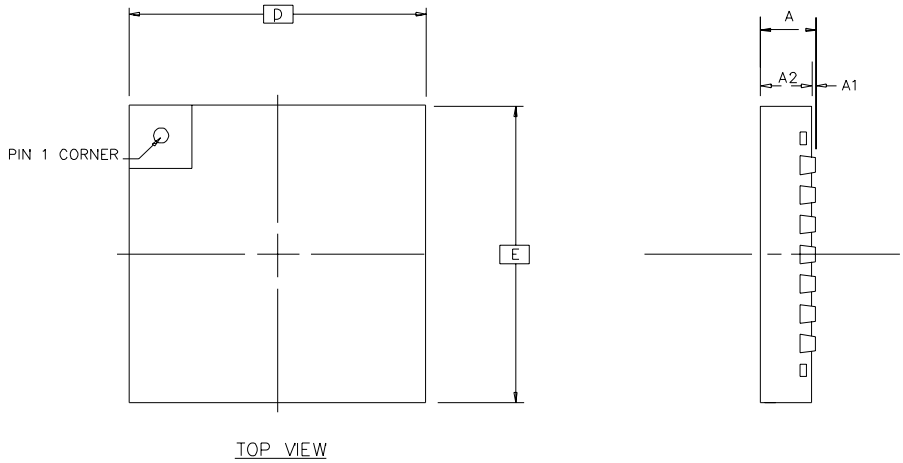

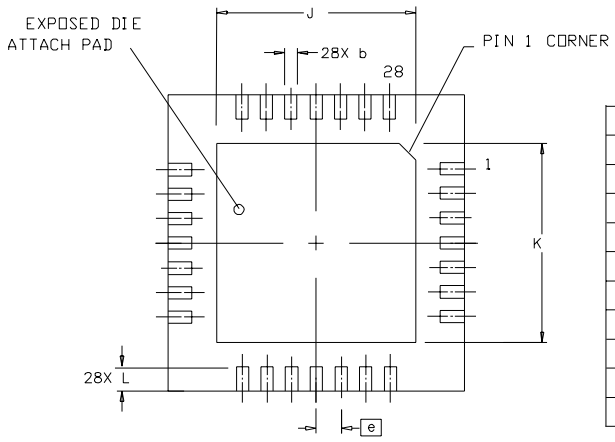

	MM			INCH		
	MIN	NOM	MAX	MIN	NOM	MAX
A	0.80		1.00	.031		.039
J/K	3.47	3.57	3.67	.137	.140	.144
D/E		5.00 BSC			.197 BSC	
A1	0.00		0.05	.000		.002
N	28					
A2	0.75		1.00	.029		.039
e		0.50 BSC			.020 BSC	
L	0.35	0.40	0.45	.014	.016	.018
b	0.20	0.25	0.30	.008	.010	.012

SO28

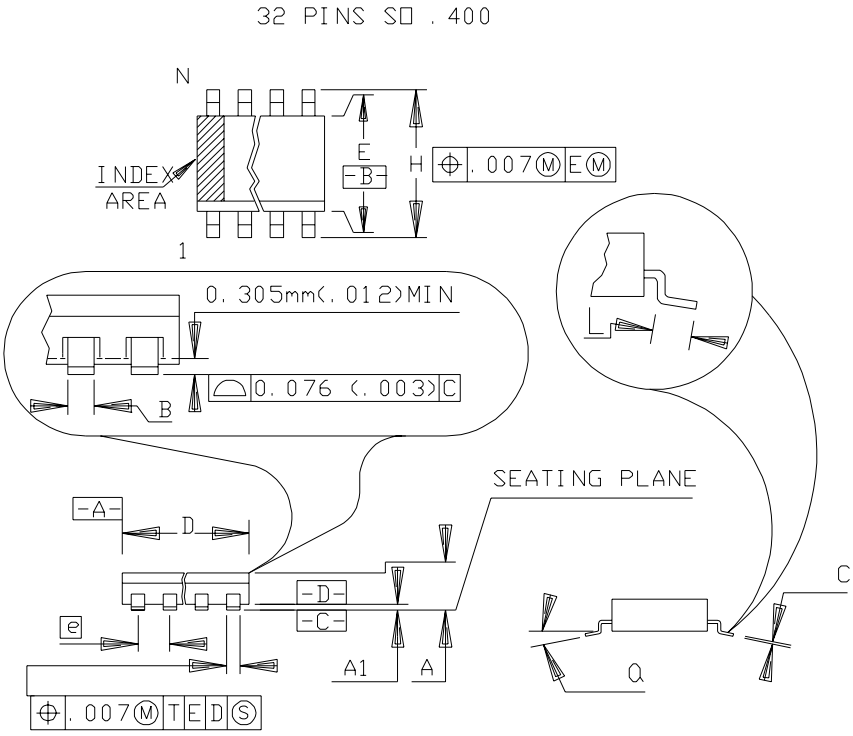

	MM		INCH	
A	2. 29	2. 54	. 090	. 100
A1	0. 102	0. 254	. 004	. 010
B	0. 38	0. 51	. 015	. 020
C	0. 15	0. 27	. 006	. 0105
D	20. 83	21. 08	. 820	. 830
E	10. 03	10. 29	. 395	. 405
e	1. 27	BSC	. 050	BSC
H	13. 49	13. 84	. 531	. 545
L	0. 53	1. 04	. 021	. 041
N	32		32	
α	0°	8°	0°	8°

Datasheet Change Log

Changes from 4234A-05/03 to 4234B-02/04

1. Addition of CRST, CIO, CCLK controllers descriptions, page 10.
2. Update of Hardware\Software activation description, page 13.
3. Suppression of low voltage regulator mode for power down modes, page 18.
4. Modification of clock values in CONFIG2 regsiter, page 22.
5. Addition of a point on QFN pinout view, page2.
6. Update of electrical characteristics, page 28.

Changes from 4234B-02/04 to 4234C - 04/04

1. Addition of references in ordering information
2. Update of EVCC description
3. Update of CARDDET bit and INSERT bit description

Atmel Corporation

2325 Orchard Parkway
San Jose, CA 95131
Tel: 1(408) 441-0311
Fax: 1(408) 487-2600

Regional Headquarters

Europe
Atmel Sarl
Route des Arsenaux 41
Case Postale 80
CH-1705 Fribourg
Switzerland
Tel: (41) 26-426-5555
Fax: (41) 26-426-5500

Asia
Room 1219
Chinachem Golden Plaza
77 Mody Road Tsimshatsui
East Kowloon
Hong Kong
Tel: (852) 2721-9778
Fax: (852) 2722-1369

Japan
9F, Tonetsu Shinkawa Bldg.
1-24-8 Shinkawa
Chuo-ku, Tokyo 104-0033
Japan
Tel: (81) 3-3523-3551
Fax: (81) 3-3523-7581

Atmel Operations

Memory
2325 Orchard Parkway
San Jose, CA 95131
Tel: 1(408) 441-0311
Fax: 1(408) 436-4314

Microcontrollers
2325 Orchard Parkway
San Jose, CA 95131
Tel: 1(408) 441-0311
Fax: 1(408) 436-4314

La Chantrerie
BP 70602
44306 Nantes Cedex 3, France
Tel: (33) 2-40-18-18-18
Fax: (33) 2-40-18-19-60

ASIC/ASSP/Smart Cards
Zone Industrielle
13106 Rousset Cedex, France
Tel: (33) 4-42-53-60-00
Fax: (33) 4-42-53-60-01

1150 East Cheyenne Mtn. Blvd.
Colorado Springs, CO 80906
Tel: 1(719) 576-3300
Fax: 1(719) 540-1759

Scottish Enterprise Technology Park
Maxwell Building
East Kilbride G75 0QR, Scotland
Tel: (44) 1355-803-000
Fax: (44) 1355-242-743

RF/Automotive
Theresienstrasse 2
Postfach 3535
74025 Heilbronn, Germany
Tel: (49) 71-31-67-0
Fax: (49) 71-31-67-2340

1150 East Cheyenne Mtn. Blvd.
Colorado Springs, CO 80906
Tel: 1(719) 576-3300
Fax: 1(719) 540-1759

Biometrics/Imaging/Hi-Rel MPU/ High Speed Converters/RF Datacom
Avenue de Rochepleine
BP 123
38521 Saint-Egreve Cedex, France
Tel: (33) 4-76-58-30-00
Fax: (33) 4-76-58-34-80

e-mail
literature@atmel.com

Web Site
http://www.atmel.com

Disclaimer: Atmel Corporation makes no warranty for the use of its products, other than those expressly contained in the Company's standard warranty which is detailed in Atmel's Terms and Conditions located on the Company's web site. The Company assumes no responsibility for any errors which may appear in this document, reserves the right to change devices or specifications detailed herein at any time without notice, and does not make any commitment to update the information contained herein. No licenses to patents or other intellectual property of Atmel are granted by the Company in connection with the sale of Atmel products, expressly or by implication. Atmel's products are not authorized for use as critical components in life support devices or systems.

© **Atmel Corporation 2004**. **All rights reserved.** Atmel® and combinations thereof, are the registered trademarks of Atmel Corporation or its subsidiaries. Other terms and product names may be the trademarks of others.

Printed on recycled paper.

4234C–SCR–04/04 /xM